Adattabile a : *Suitable To :* **SCANIA** **GRS920 - GRS920R (W/Retarder)**

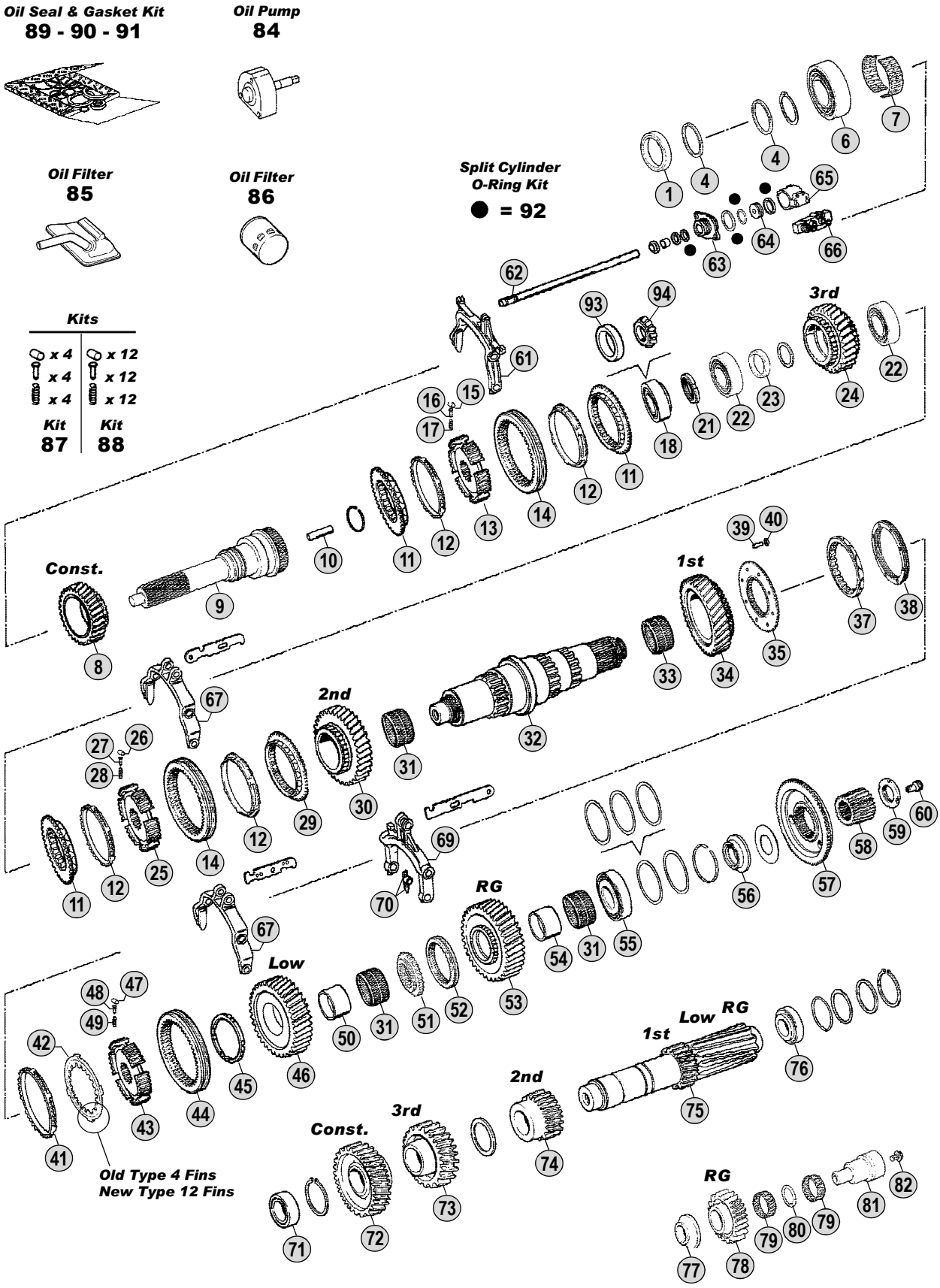

All original equipment manufacturers'numbers, symbols, pictures, models and description used in this catalogue are for refecence only, and it is not implied that any part listed is the product of these manufactures.
Tutti i nostri particolari non sono originali ma con essi intercambiabili. I riferimenti originali, le figure, i modelli sono esposti a semplice titolo indicativo. La nostra produzione riporta il nostro marchio.

Models

Serie 4 - Serie P - Serie R

164(580)C/G/L

P/R560 - **P/R**620

CEI HIGH FIDELITY SPARE PARTS

Fig.	CEI no.	Rif. SCANIA	Description	Q.ty	Note	GRS920	GRS920R			
1	*139.567*	1318388	Oil Seal 55x75x9	1		●	●			
4	*139.582*	1515004	Ring	2		●	●			
6	*130.528*	1327878	Bearing D.65x150x40	1	**Oem**	●	●			
6	**530.528**	1327878	Bearing D.65x150x40	1	**A.Market**	●	●			
7	**137.169**	372778	Needle Cage 92X100X44	1		●	●			
8	**146.552**	1399190	Constant Gear	1		●	●			
9	**102.264**	1377307	Input Shaft	1		●	●			
9	**102.334**	1378579	Input Shaft	1	**EK-PTO**	●	●			
10	**189.502**	315060	Oil tube	1		●	●			
11	**109.167**	1116475	Synchronizer Cone	3		●	●			
12	**119.145**	1382465	Synchronizer Ring	4	**(A)**	●	●			
12	**119.236**	1756447	Synchronizer Ring	4	**(B)**	●	●			
13	**157.552**	1376499	Synchronizer Hub	1		●	●			
14	**154.194**	369906	Sliding Sleeve	2	**(A)**	●	●			
14	**154.386**	1529939	Sliding Sleeve	2	**(B)**	●	●			
15	**160.198**	374334	Roller	4		●	●			
16	**160.199**	369910	Pin	4		●	●			
17	**156.177**	369911	Spring	4		●	●			
18	*130.821*	1548817	Bearing 40x85x33	1	Old Type	●	●			
21	**187.647**	1461414	Nut	1		●	●			
22	*130.531*	1548056	Bearing	2		●	●			
23	*111.238*	1302731	Spacer T.9,50 mm	1		●	●			
23	*111.239*	1302732	Spacer T.9,52 mm	1		●	●			
23	*111.240*	1302733	Spacer T.9,54 mm	1		●	●			
23	*111.241*	1302734	Spacer T.9,56 mm	1		●	●			
23	*111.242*	1302735	Spacer T.9,58 mm	1		●	●			
24	**145.754**	1376378	Gear 3rd Speed 32 T	1		●	●			
25	**157.553**	1405981	Synchronizer Hub	1		●	●			
26	**160.198**	374334	Roller	4		●	●			
27	**160.199**	369910	Pin	4		●	●			
28	**156.177**	369911	Spring	4		●	●			
29	**109.165**	1116477	Synchronizer Cone	1		●	●			
30	*145.755*	1376382	Gear 2nd Speed 35 T	1		●	●			
31	**137.170**	378628	Needle Cage D.80x88x40	3		●	●			
32	**103.136**	1382978	Main Shaft	1		●	●			
33	**137.171**	378616	Needle Cage D.80x88x55	1		●	●			
34	*145.756*	1846637	Gear 1st Speed 44 T	1		●	●			
35	**109.166**	1300061	Synchronizer Cone	1		●	●			
37	**119.203**	1438526	Synchronizer Ring	1		●	●			
38	**119.147**	1383895	Intermediate Synchro Ring	1	**(A)**	●	●			
38	**119.235**	1466318	Intermediate Synchro Ring	1	**(B)**	●	●			
39	**160.193**	1340002	Pin	8		●	●			
40	**111.197**	383138	Lock Ring	8		●	●			
41	**119.146**	1401620	Synchronizer Ring	1	**(A)(1)** New Style 12 Fins	●	●			
41	**119.202**	1529950	Synchronizer Ring	1	**(B)**	●	●			

All original equipment manufacturer's numbers, symbols, pictures, models and description used in this catalogue are for refecence only, and it is not implied that any part listed is the product of these manufactures.
Tutti i nostri particolari non sono originali ma con essi intercambiabili. I riferimenti originali, le figure, i modelli sono esposti a semplice titolo indicativo. La nostra produzione riporta il nostro marchio.

Notes

(A - B) To be coupled together
(1) **Old style with 4 fins** not listed in the catalogue. The old ring **391804** (fig.42) and the old Synchro ring **373272** (fig.41) can be repalced by :
1 pc. **169.740 - 1401622** (Fig.42) + 1 pc. **119.146 - 1401620** (Fig.41)
(*)**Old and New Gen.** Can be replaced by Synchro rebuilt kit **298.188** (Latest Gen.) shown in the next table.
(@) **LATEST GENERATION.** To be coupled together.

Date
05 / **2010**

Table
0200

Adattabile a : *Suitable To :* **SCANIA** **GRS920 - GRS920R (W/Retarder)**

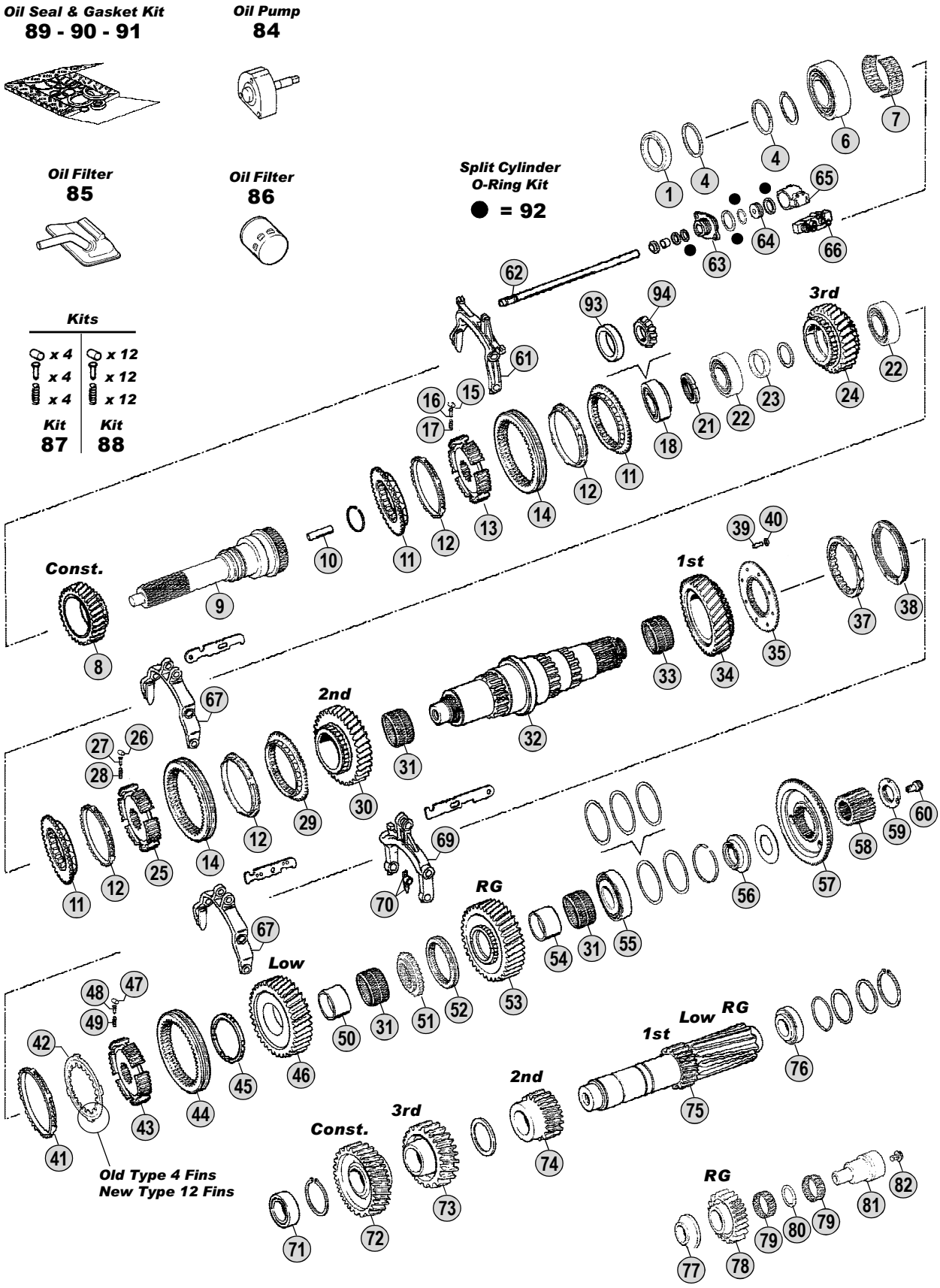

All original equipment manufacturers'numbers, symbols, pictures, models and description used in this catalogue are for refecence only, and it is not implied that any part listed is the product of these manufactures.
Tutti i nostri particolari non sono originali ma con essi intercambiabili. I riferimenti originali, le figure, i modelli sono esposti a semplice titolo indicativo. La nostra produzione riporta il nostro marchio.

Models

Serie 4 - Serie P - Serie R

164(580)C/G/L

P/R560 - **P/R**620

CEI
HIGH FIDELITY SPARE PARTS

Fig.	CEI no.	Rif. SCANIA	Description	Q.ty	Note	GRS920	GRS920R			
42	**169.740**	1401622	Driver Plate	1	**(A)(1)** New Style 12 Fins	●	●			
42	**169.848**	1533848	Driver Plate	1	**(B)**	●	●			
43	**157.553**	1405981	Synchronizer Hub	1		●	●			
44	**154.196**	371692	Sliding Sleeve	1	**(A)**	●	●			
44	**154.386**	1529939	Sliding Sleeve	1	**(B)**	●	●			
45	*111.237*	395759	Ring	1		●	●			
46	**145.577**	1394865	Gear Low Speed 40 T	1		●	●			
47	**160.198**	374334	Roller	4		●	●			
48	**160.199**	369910	Pin	4		●	●			
49	**156.177**	369911	Spring	4		●	●			
50	**117.366**	1304852	Bush	1		●	●			
51	**157.668**	378627	Fixed Hub	1		●	●			
52	**154.330**	378646	Sliding Sleeve	1		●	●			
53	**147.208**	378633	Reverse Gear 36 T	1		●	●			
54	**117.365**	1304853	Bush	1		●	●			
55	*130.528*	1327878	Bearing D.65x150x40	1	**Oem**	●	●			
55	**530.528**	1327878	Bearing D.65x150x40	1	**A.Market**	●	●			
56	*169.910*	1113910	Spacer	1		●	●			
57	**109.190**	1304850	Synchronizer Cone	1	**(*)** Old Generation	●	●			
57	*109.420*	1789444	Synchronizer Cone	1	**(*)** New Generation	●	●			
57	**109.755**	1883354	Synchronizer Cone	1	**(@)** Latest Generation	●	●			
58	**157.549**	1459308	Sun Gear 24 T	1		●				
58	**157.554**	1459309	Sun Gear 24 T	1			●			
59	**187.648**	1461417	Nut	1		●				
59	**187.649**	1461416	Nut	1			●			
60	*189.617*	1387297	Oil Plug	1		●	●			
61	*198.845*	1335671	Fork	1		●	●			
62	*149.261*	1335174	Rod	1		●	●			
63	*132.059*	1305977	Intermediate Element	1		●	●			
64	*189.620*	1337894	Piston	1		●	●			
65	*132.060*	1345149	Cylinder	1		●	●			
66	**280.548**	1488083	Solenoid Valve	1		●	●			
67	*141.171*	1327286	Fork	2		●	●			
69	*141.180*	1305971	Fork	1		●	●			
70	*141.179*	1423958	Slide	2		●	●			
71	*130.295*	1903570	Bearing D.50x100x37,65	1	**Oem**	●	●			
71	**530.295**	1903570	Bearing D.50x100x37,65	1	**A.Market**	●	●			
72	**146.553**	1401659	Constant Gear 38 T	1		●	●			
73	**146.554**	1376380	Gear 3rd Speed 34 T	1		●	●			
74	*146.555*	1376384	Gear 2nd Speed 24 T	1		●	●			
75	*105.169*	1399192	Countershaft 12/19 T	1		●	●			
76	*130.532*	1357711	Bearing 60X130X33,5	1	**Oem**	●	●			
76	**530.532**	1357711	Bearing 60X130X33,5	1	**A.Market**	●	●			
77	*169.907*	378614	Washer	1		●	●			
78	*147.209*	380110	Reverse Gear	1		●	●			

All original equipment manufacturer's numbers, symbols, pictures, models and description used in this catalogue are for refecence only, and it is not implied that any part listed is the product of these manufactures.
Tutti i nostri particolari non sono originali ma con essi intercambiabili. I riferimenti originali, le figure, i modelli sono esposti a semplice titolo indicativo. La nostra produzione riporta il nostro marchio.

Notes

(A - B) To be coupled together
(1) **Old style with 4 fins** not listed in the catalogue. The old ring **391804** (fig.42) and the old Synchro ring **373272** (fig.41) can be repalced by :
1 pc. **169.740 - 1401622** (Fig.42) + 1 pc. **119.146 - 1401620** (Fig.41)
(*)**Old and New Gen.** Can be replaced by Synchro rebuilt kit **298.188** (Latest Gen.) shown in the next table.
(@) **LATEST GENERATION.** To be coupled together.

Adattabile a : *Suitable To :* SCANIA GRS920 - GRS920R (W/Retarder)

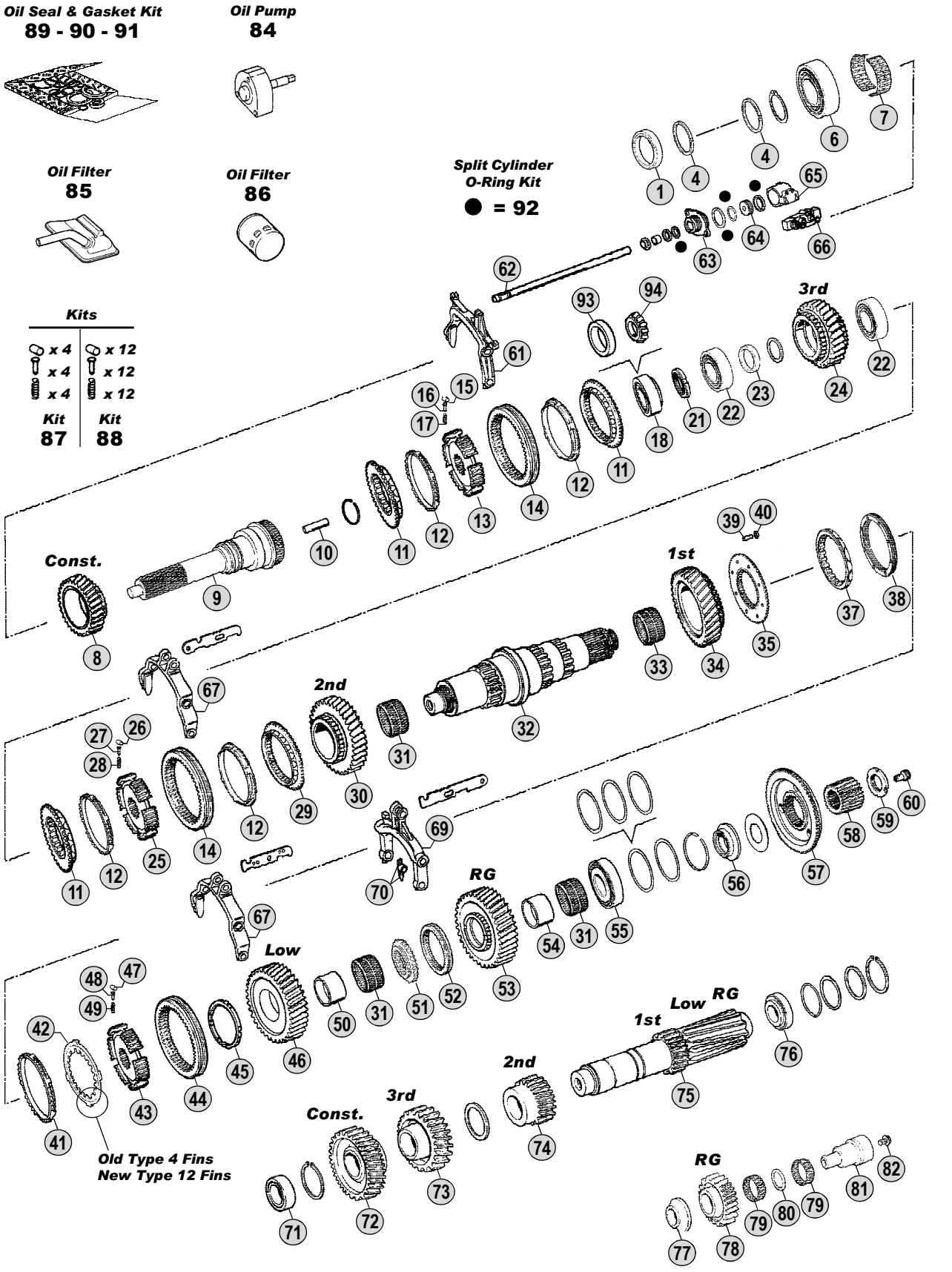

All original equipment manufacturers'numbers, symbols, pictures, models and description used in this catalogue are for refecence only, and it is not implied that any part listed is the product of these manufactures.
Tutti i nostri particolari non sono originali ma con essi intercambiabili. I riferimenti originali, le figure, i modelli sono esposti a semplice titolo indicativo. La nostra produzione riporta il nostro marchio.

Models

Serie 4 - Serie P - Serie R

164(580)C/G/L

P/R560 - **P/R**620

CEI HIGH FIDELITY SPARE PARTS

Fig.	CEI no.	Rif. SCANIA	Description	Q.ty	Note	GRS920	GRS920R			
79	**137.172**	378615	Needle Cage D.50x62x21,5	2		●	●			
80	*169.908*	380109	Spacer	1		●	●			
81	*147.203*	1510337	Reverse Pin	1		●	●			
82	*187.650*	812534	Screw	1		●	●			
84	*280.540*	1426449	Oil Pump	1		●	●			
85	*280.611*	1307097	Oil Filter	1		●	●			
86	*280.612*	1768402	Oil Filter	1		●	●			
87	**198.847**	CEI 198847	Roller-Pins and Springs kit	1		●	●			
88	**198.848**	CEI 198848	Roller-Pins and Springs kit	1		●	●			
89	**198.850**	CEI 198850	Gasket kit	1	Only gaskets	●	●			
90	**198.851**	CEI 198851	Oil Seals Kit	1	Only oil seals	●	●			
91	**198.846**	550577	Oil Seal and Gasket Kit	1	Complete	●	●			
92	**198.956**	CEI 198956	Split Cylinder O-Ring Kit	1		●	●			
93	*130.529*	1548819	Bearing Cone 85 mm	1	New Type	●	●			
94	*130.530*	1883975	Roller Bearing 40x30 mm	1	New Type	●	●			

All original equipment manufacturer's numbers, symbols, pictures, models and description used in this catalogue are for refecence only, and it is not implied that any part listed is the product of these manufactures.
Tutti i nostri particolari non sono originali ma con essi intercambiabili. I riferimenti originali, le figure, i modelli sono esposti a semplice titolo indicativo. La nostra produzione riporta il nostro marchio.

Notes

(A - B) To be coupled together
(1) **Old style with 4 fins** not listed in the catalogue. The old ring **391804** (fig.42) and the old Synchro ring **373272** (fig.41) can be repalced by :
1 pc. **169.740 - 1401622** (Fig.42) + 1 pc. **119.146 - 1401620** (Fig.41)
(*)**Old and New Gen.** Can be replaced by Synchro rebuilt kit **298.188** (Latest Gen.) shown in the next table.
(@) **LATEST GENERATION.** To be coupled together.

Modelli Cambio/ *Gearbox Models*

Adattabile a : *Suitable To :* **SCANIA GRS920 - GRS920R (W/Retarder)**

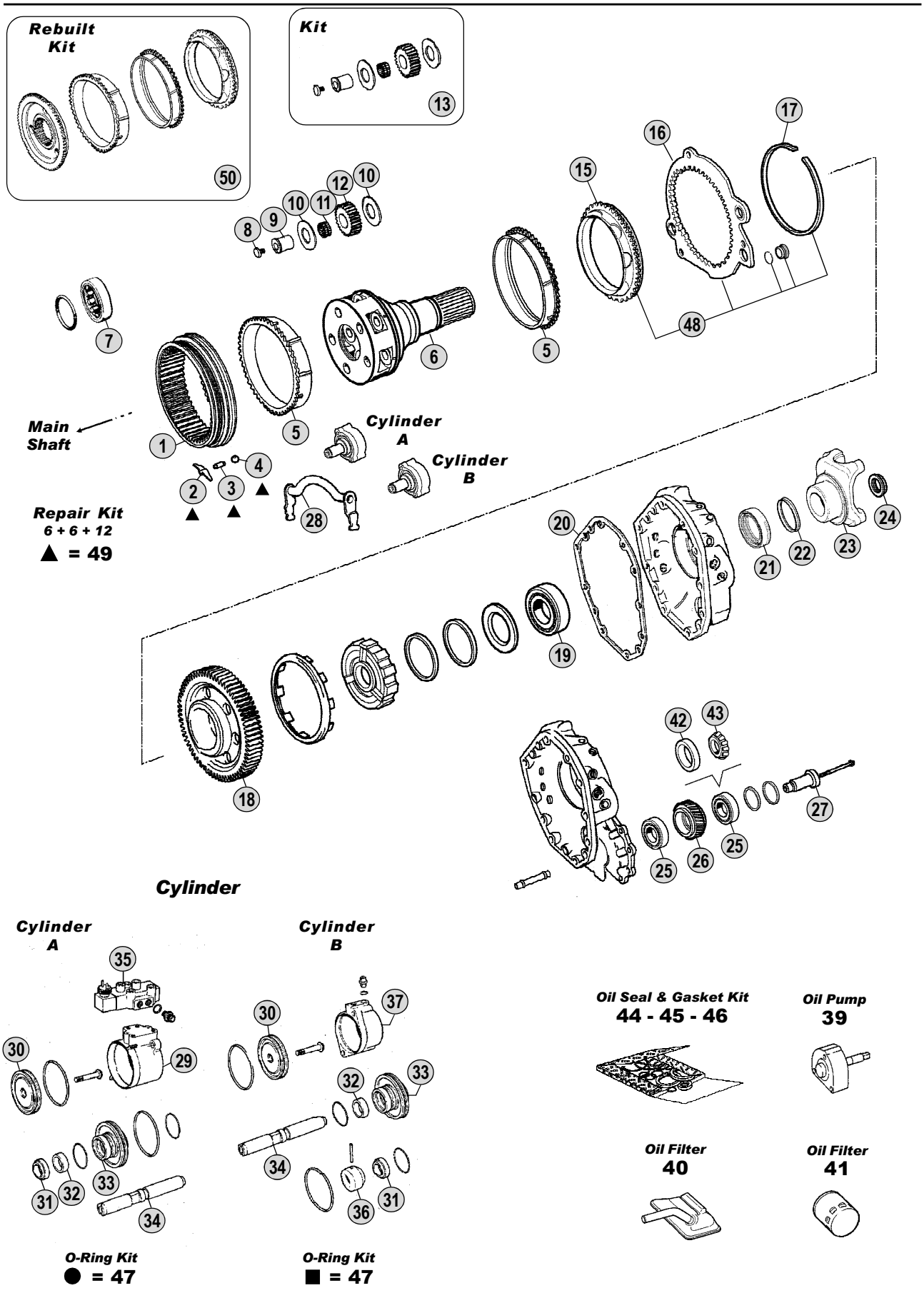

Models

Serie 4 - Serie P - Serie R

164(580)C/G/L

P/R560 - **P/R**620

All original equipment manufacturers'numbers, symbols, pictures, models and description used in this catalogue are for refecence only, and it is not implied that any part listed is the product of these manufactures.
Tutti i nostri particolari non sono originali ma con essi intercambiabili. I riferimenti originali, le figure, i modelli sono esposti a semplice titolo indicativo. La nostra produzione riporta il nostro marchio.

CEI HIGH FIDELITY SPARE PARTS

Fig.	CEI no.	Rif. SCANIA	Description	Q.ty	Note		GRS920	GRS920R			
1	**123.216**	1118030	Crown Gear 66 T	1			●	●			
2	**156.185**	1395039	Spring	6			●	●			
3	**160.215**	1332508	Pin	6			●	●			
4	**160.216**	871702	Ball	12			●	●			
5	**119.121**	1395624	Synchronizer Ring	2	(*)	Old Generation	●	●			
5	*119.249*	1770058	Synchronizer Ring	2	(*)	New Generation	●	●			
5	**119.288**	1883363	Synchronizer Ring	1	(@)	Latest Generation	●	●			
6	**190.332**	1318221	Planetary Carrier	1		Complete	●				
6	**190.333**	1318225	Planetary Carrier	1		Complete		●			
7	**130.622**	1300596	Bearing	1				●			
8	**187.606**	1318714	Screw	5			●	●			
9	**107.171**	1318713	Pin	5			●	●			
10	**169.796**	389419	Washer	10			●	●			
11	**137.168**	389434	Needle Bearing	5			●	●			
12	**157.199**	1373174	Planet Pinion 20 T	5			●	●			
13	**198.849**	CEI 198849	Repair kit	5			●	●			
15	**109.168**	1323147	Synchronizer Cone	1	(*)	Old Generation	●	●			
15	*109.421*	1788170	Synchronizer Cone	1	(*)	New Generation	●	●			
15	**109.756**	1883350	Synchronizer Cone	1	(@)	Latest Generation	●	●			
16	**135.126**	1323145	Saddle Plate	1			●	●			
17	**111.207**	1302665	Snap Ring	1			●	●			
18	**145.743**	1426758	Retarder Gear 70 T	1				●			
19	*130.533*	1783324	Bearing D.60x130x31	1			●	●			
20	*139.574*	1305139	Gasket	1			●	●			
21	*139.568*	1502384	Oil Seal 85x105x13	1			●	●			
22	*139.481*	1300977	Dust Cover	1			●	●			
23	*197.106*	1340753	Output Flange	1		P30/300	●	●			
23	*155.198*	1422427	Output Flange	1		P40/400	●	●			
23	**197.107**	1422430	Output Flange	1		P50/P500	●	●			
23	**197.076**	1319646	Output Flange	1		P60/P600	●	●			
24	**187.486**	1525988	Nut M44x1,5	1			●	●			
25	*130.621*	361043	Bearing 40x85x33	2	**Oem**	Old Type		●			
25	**530.621**	361043	Bearing 40x85x33	2	**A.Market**	Old Type		●			
26	**145.744**	1373704	Gear 34 T	1				●			
27	*107.188*	1304747	Pin	1				●			
28	*141.175*	1491403	Fork	1			●	●			
29	*132.056*	1484808	Cylinder	1			●	●			
30	*189.618*	1303960	Piston	2			●	●			
31	*139.601*	1515869	Oil Seal Ring 22X28X5/8	2			●	●			
32	*117.362*	1303799	Bush	2			●	●			
33	*132.057*	1321239	Intermediate Element	2			●	●			
34	*107.189*	1332131	Shaft	2			●	●			
35	**280.548**	1488083	Solenoid Valve	1			●	●			
36	*117.363*	1337828	Sleeve	1			●	●			
36	*117.364*	1382339	Sleeve	1			●	●			

All original equipment manufacturer's numbers, symbols, pictures, models and description used in this catalogue are for refecence only, and it is not implied that any part listed is the product of these manufactures.
Tutti i nostri particolari non sono originali ma con essi intercambiabili. I riferimenti originali, le figure, i modelli sono esposti a semplice titolo indicativo. La nostra produzione riporta il nostro marchio.

Notes

(*)**Old and New Generation.** Can be replaced by the Synchro rebuilt kit **298.188** (Fig. 50)
(@) **LATEST GENERATION.** To be coupled together.

Date

05 / **2010**

Table

0205

Modelli Cambio/ *Gearbox Models*

Adattabile a : *Suitable To :* **SCANIA GRS920 - GRS920R (W/Retarder)**

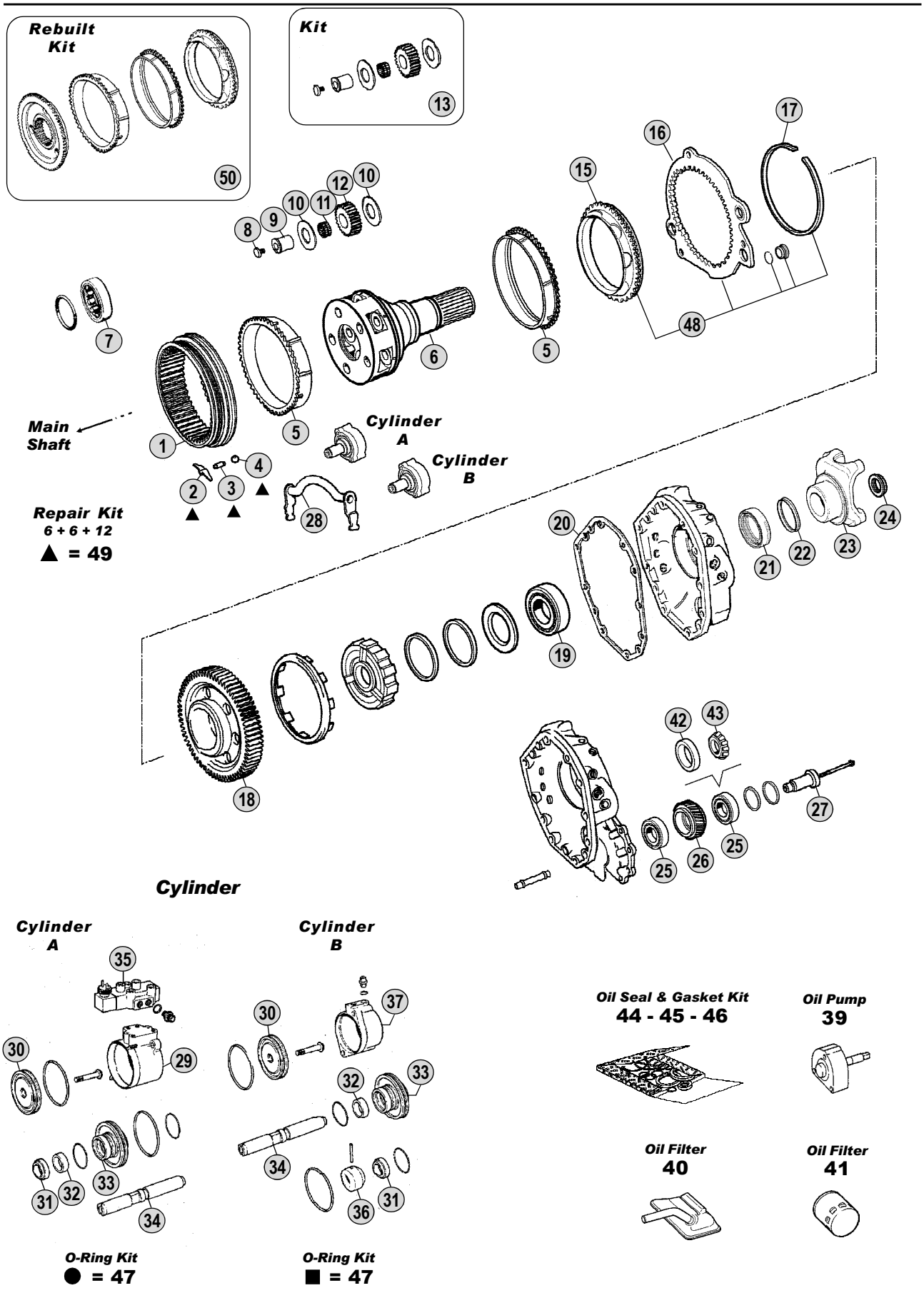

Models

Serie 4 - Serie P - Serie R

164(580)C/G/L

P/R560 - **P/R**620

All original equipment manufacturers'numbers, symbols, pictures, models and description used in this catalogue are for refecence only, and it is not implied that any part listed is the product of these manufactures.
Tutti i nostri particolari non sono originali ma con essi intercambiabili. I riferimenti originali, le figure, i modelli sono esposti a semplice titolo indicativo. La nostra produzione riporta il nostro marchio.

CEI HIGH FIDELITY SPARE PARTS

Fig.	CEI no.	Rif. SCANIA	Description	Q.ty	Note		GRS920	GRS920R			
37	*132.058*	1484809	Cylinder	1			●	●			
39	*280.540*	1426449	Oil Pump	1			●	●			
40	*280.611*	1307097	Oil Filter	1			●	●			
41	*280.612*	1768402	Oil Filter	1			●	●			
42	*130.529*	1548819	Bearing Cone 85 mm	2	**Oem**	New Type		●			
42	**530.529**	1548819	Bearing Cone 85 mm	2	**A.Market**	New Type		●			
43	*130.530*	1883975	Roller Bearing 40x30 mm	2		New Type		●			
44	**198.850**	CEI 198850	Gasket kit	1		Only gaskets	●	●			
45	**198.851**	CEI 198851	Oil Seals Kit	1		Only oil seals	●	●			
46	**198.846**	550577	Oil Seal and Gasket Kit	1		Complete	●	●			
47	**198.957**	CEI 198957	Cylinder O-Ring Kit	1		For one cyl.	●	●			
48	**198.916**	CEI 198916	Engaging Ring Kit	1		Assy	●	●			
49	**298.033**	CEI 298033	Repair Kit	1			●	●			
50	**298.188**	CEI 298188	Synchro Rebuilt Kit	1	**(@)**		●	●			

All original equipment manufacturer's numbers, symbols, pictures, models and description used in this catalogue are for refecence only, and it is not implied that any part listed is the product of these manufactures.
Tutti i nostri particolari non sono originali ma con essi intercambiabili. I riferimenti originali, le figure, i modelli sono esposti a semplice titolo indicativo. La nostra produzione riporta il nostro marchio.

Notes

(*)**Old and New Generation.** Can be replaced by the Synchro rebuilt kit **298.188** (Fig. 50)
(@) **LATEST GENERATION.** To be coupled together.

Date

05 / **2010**

Table

0205

CEI
HIGH FIDELITY SPARE PARTS